THE FILLER CAP INCORPORATES AN INTERNAL STRAINER TO REDUCE THE RISK OF ACCIDENTAL CONTAMINATION WHILST FILLING. THE FILLER CAP ALSO INCORPORATES AN AIR BREATHER THAT WILL FILTER AIR ENTERING THE RESERVOIR WHEN IN SERVICE.

AN INTERNALLY FITTED OUTLET STRAINER IS INCLUDED TO FILTER OIL LEAVING THE RESERVOIR BEFORE CIRCULATING THE SYSTEM.

ALL HYDRAULIC SYSTEMS MUST INCLUDE A RETURN LINE FILTER. THIS WILL FINALLY REMOVE ALMOST ALL WEAR PARTICLES FROM THE OIL.

THE RESERVOIR SIZE IS DETERMINED BY PUMP OUTPUT, WORKING PRESSURE, AND LENGTH OF TIME THAT IT SHALL OPERATE.

IF NO OIL COOLER IS INCORPORATED IN THE SYSTEM, THE RESERVOIR ALONE WILL BE THE ONLY MEANS OF DISSIPATING HEAT, THEREFORE INSTALLATION ALLOWING AN AIR SPACE ALL ROUND THE RESERVOIR IS ESSENTIAL.

RESERVOIRS ARE FABRICATED IN STAINLESS STEEL AND THE WELDING OF STRAPS OR BRACKETS ETC., FOR INSTALLATION IS PERMITTED.

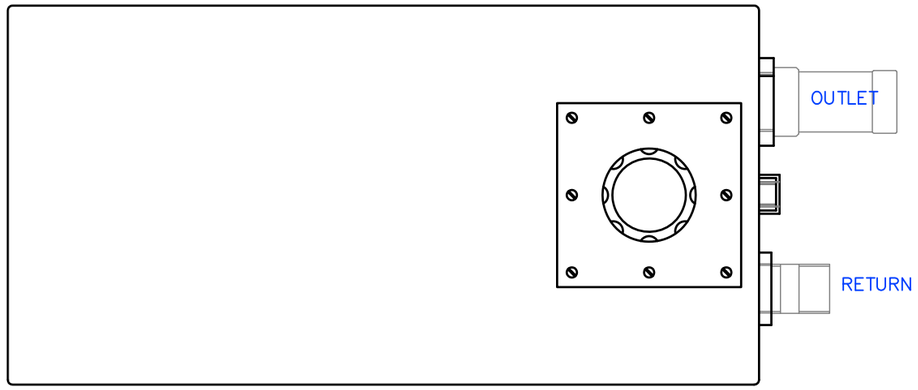

RESERVOIR REF. R18

CAPACITY _____ 80 LITRES (18 GL.)
WEIGHT_____ 24 KG. (EMPTY)

SUPPLIED AS STANDARD WITH:–
FILLER/BREATHER CAP.
INTERNAL FILLER STRAINER.
INTERNAL STRAINER TO OUTLET.
OUTLET TAILPIPE.
TEMPERATURE/LEVEL GAUGE.

FABRICATED FROM STAINLESS STEEL.

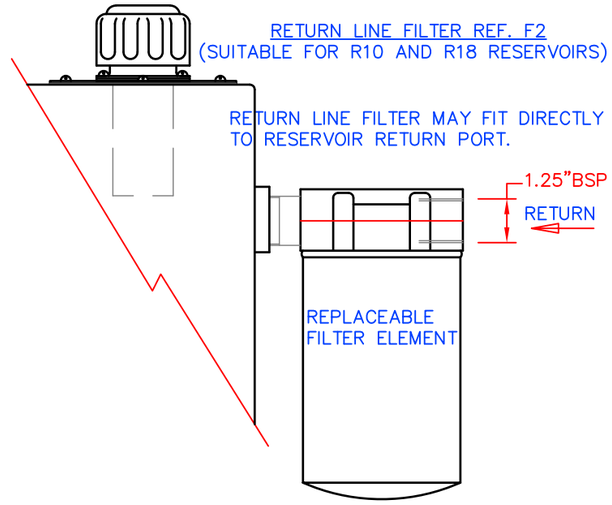

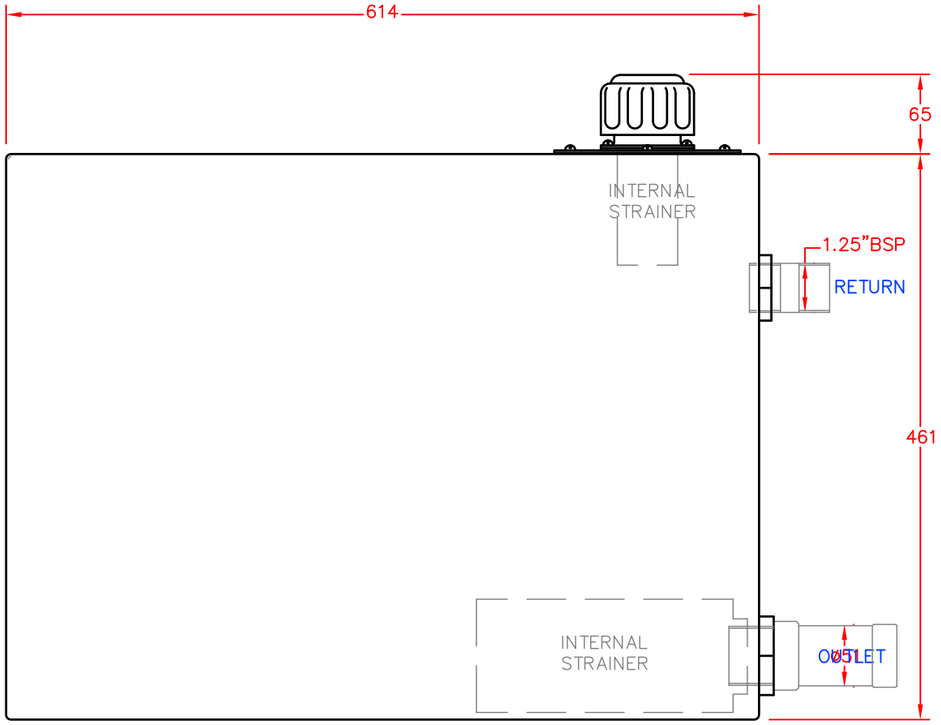

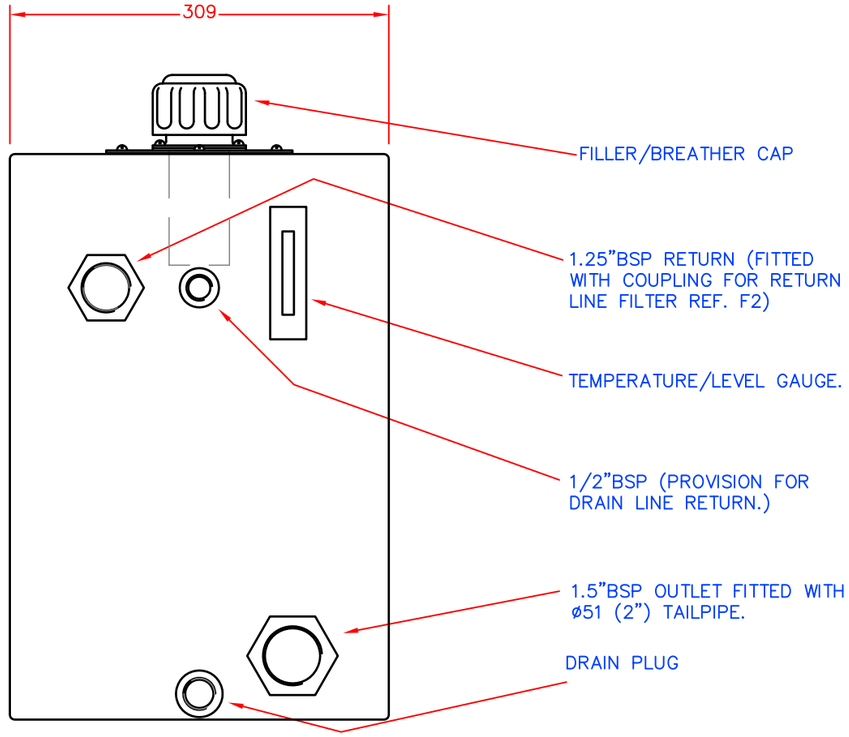

ALTERATIONS	DATE	ALTERATIONS	DATE		
				SCALE 1:5	
				DRN. M.J.S.	DATE 05.11.97

spencer carter

TITLE
RESERVOIR – REF R18 (18 GL.)

SPENCER CARTER LTD.
FALMOUTH, CORNWALL, U.K.

TEL. (01326) 373423
FAX. (01326) 373571

DRG.NO.
623–465