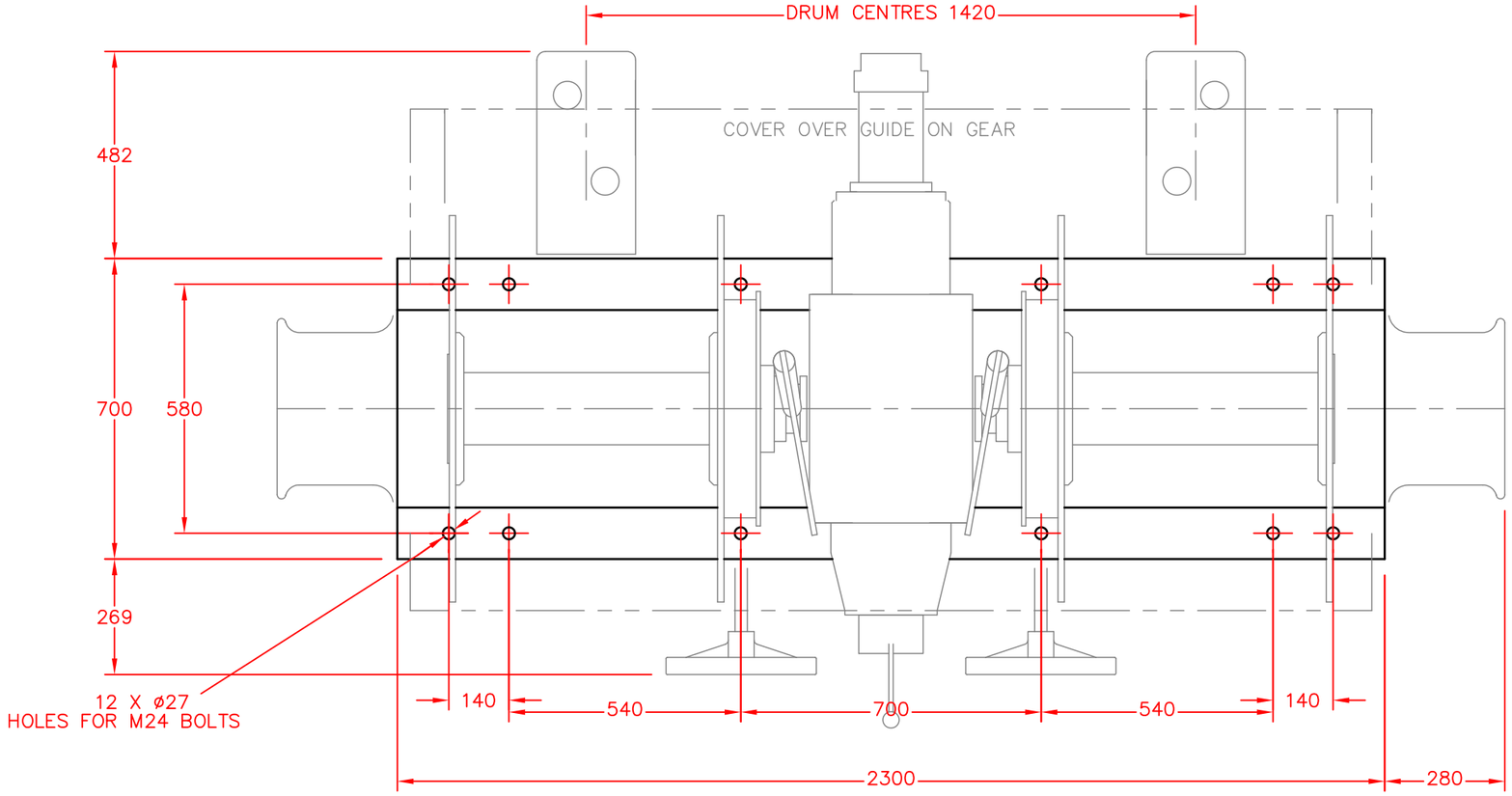

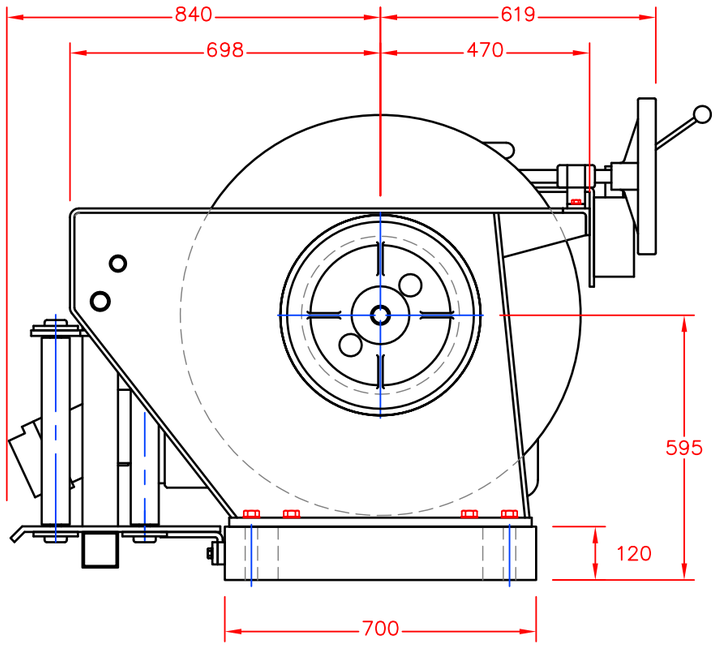

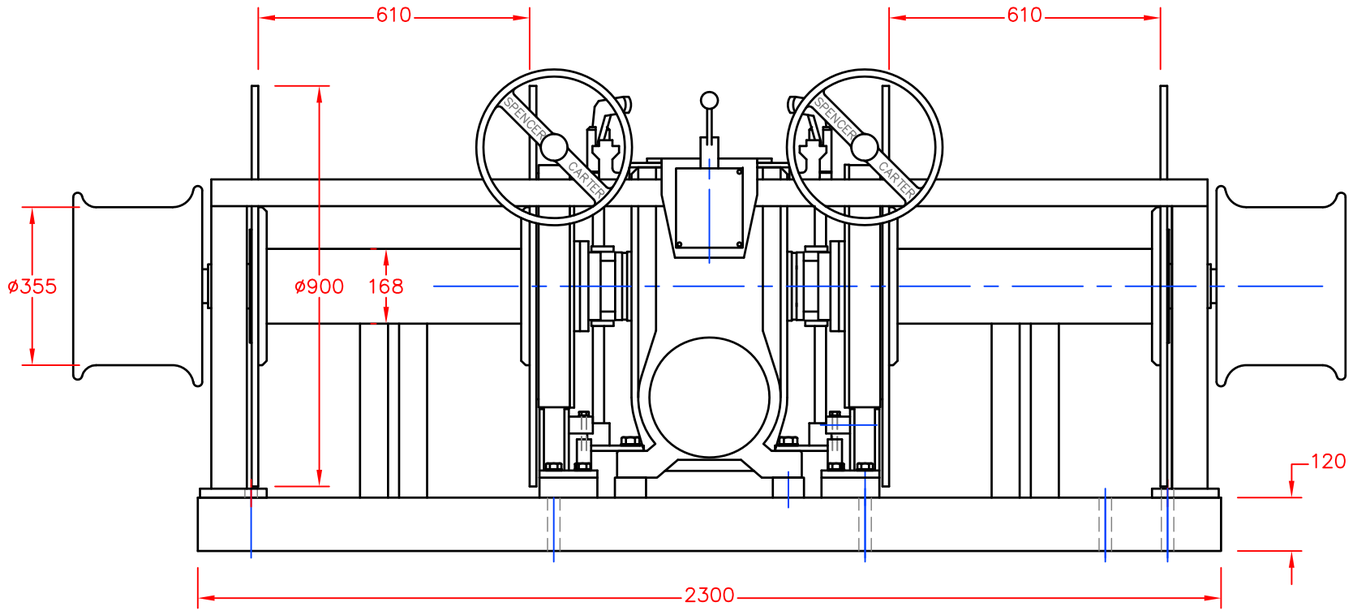

ALTERATIONS	DATE	ALTERATIONS	DATE

SCALE 1:15

DRN. A.M. DATE 21.08.07

TITLE
3.5 TON TRAWL WINCH TW6 + O/SIZE FLANGES

SPENCER CARTER LTD.
FALMOUTH, CORNWALL, U.K.

TEL. (01326) 373423
FAX. (01326) 373571

DRG.NO.
623–775