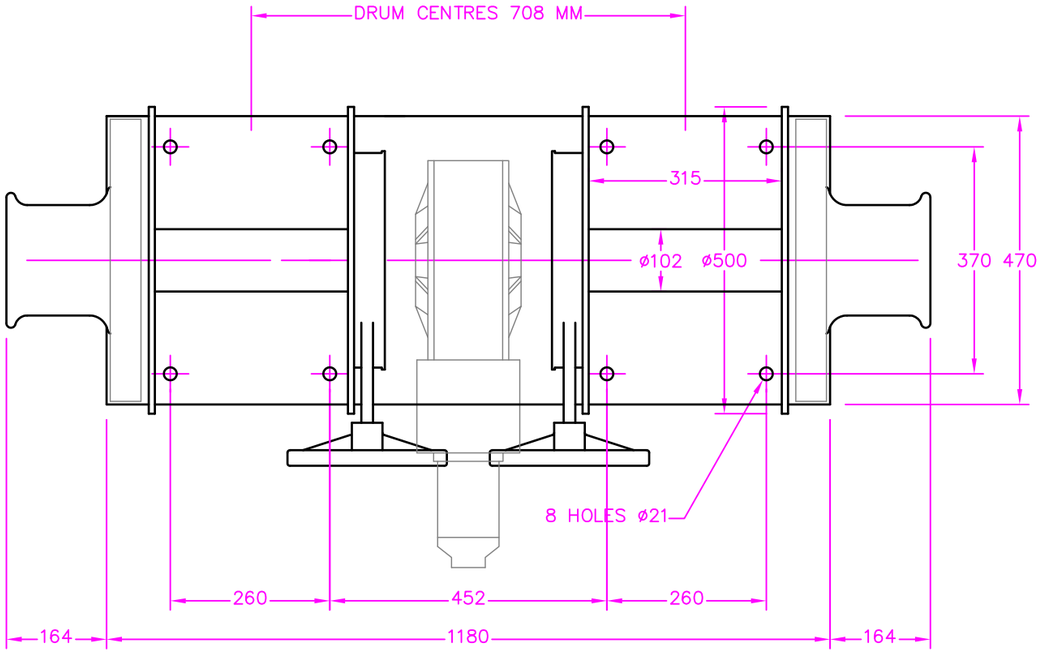

HYDRAULIC SUPPLY REQUIRED _____ 45 LPM. @ 140 BAR
THIS WILL BE AVAILABLE WITH PUMP SIZE 2P10 AND AN ENGINE SPEED OF 1000 RPM.

WINCH SPEED _____ 50 RPM
WINCH TORQUE _____ 1300 NM

FIRST LAYER WIRE SPEED _____ 16 METRES/MINUTE
MID LAYER WIRE SPEED _____ 45 METRES/MINUTE
TOP LAYER WIRE SPEED _____ 70 METRES/MINUTE

WINCH PULL
FIRST LAYER _____ 2.6 TONS
MID LAYER _____ .8 TONS
TOP LAYER _____ .5 TONS

WIRE CAPACITY
TO MID LAYER _____ 275M X 10 MM WIRE
TO TOP LAYER _____ 550M X 10 MM WIRE

THE TOP LAYER IS CALCULATED TO HAVE FILLED THE WINCH DRUM TO ø480.

WIEGHT.....390 KG.

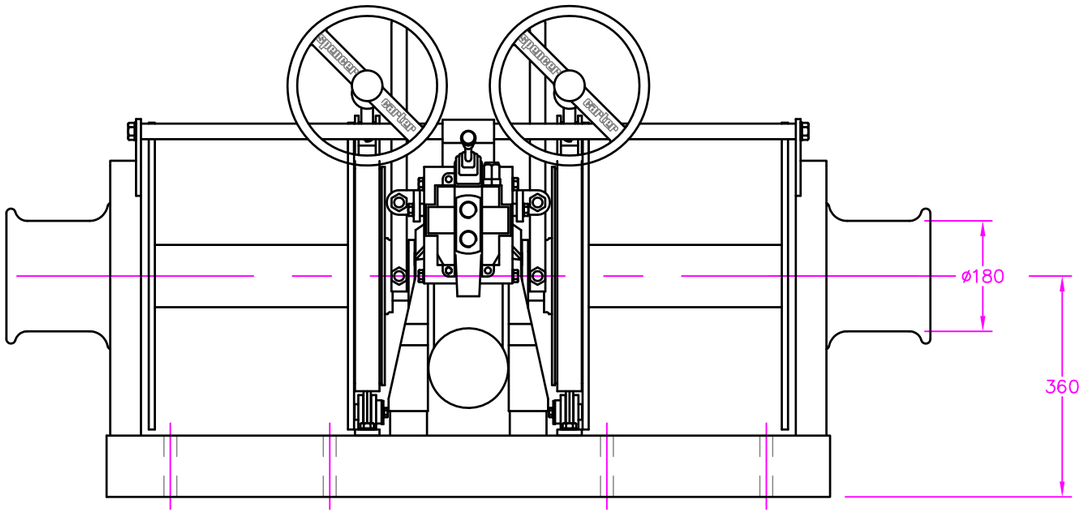

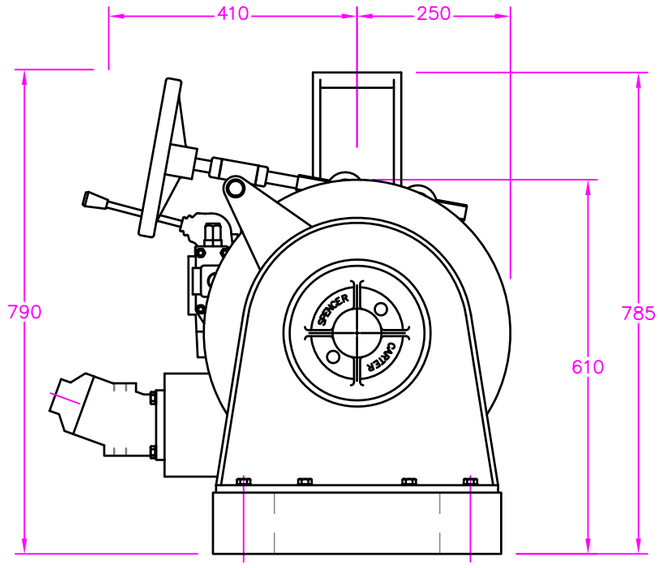

ALTERATIONS	DATE	ALTERATIONS	DATE			
				SCALE 1:10		
				DRN. M.J.S.	DATE 04.11.97	

spencer carter

TITLE
3/4 TON TRAWL WINCH TW2

SPENCER CARTER LTD.
FALMOUTH, CORNWALL, U.K.

TEL. (01326) 373423
FAX. (01326) 373571

DRG.NO.
623–463